SECTION: C 1710 – ICA OF INSTALLED EQUIPMENT
TYPE: 12 MONTH NVG INSPECTION
NOTE:

Registration No.: N _____ Start Date: _____ Aircraft Start Total Time: _____
Aircraft S/N: _____ Aircraft Start Total Cycles: _____

MAINTENANCE ACTION		REFERENCE	MECHANIC'S INITIALS
C 1710.1	**GENERAL**		
1.1	Logbook review for recorded discrepancies. Correct discrepancies on installed equipment.		
1.2	Ensure all applicable and required Special Inspections, Alert Service Bulletins (ASB's), Engine Service Bulletins, and Airworthiness Directives (AD's) are accomplished.		
1.3	Replace all life limited components that have completed published operating limits.	Bell 206L MP	
1.4	Overhaul all components that have completed published operating limits.	Bell 206L MP	
C 1710.2	**ASU NIGHT VISION GOOGLE LIGHTING SYSTEM (STC SR01383SE)**		
2.1	Inspect aircraft for conformity to the approved STC configuration.		
2.2	Inspect aircraft windscreen and applicable transparencies for defects that may affect the performance of the NVGs. Utilize the applicable OEM Maintenance Manual for airworthiness limits associated with this inspection.		
2.3	Open doors 1, 2, and 3 and remove access panels 4, 5, 6, and 7.	Para 3-2	

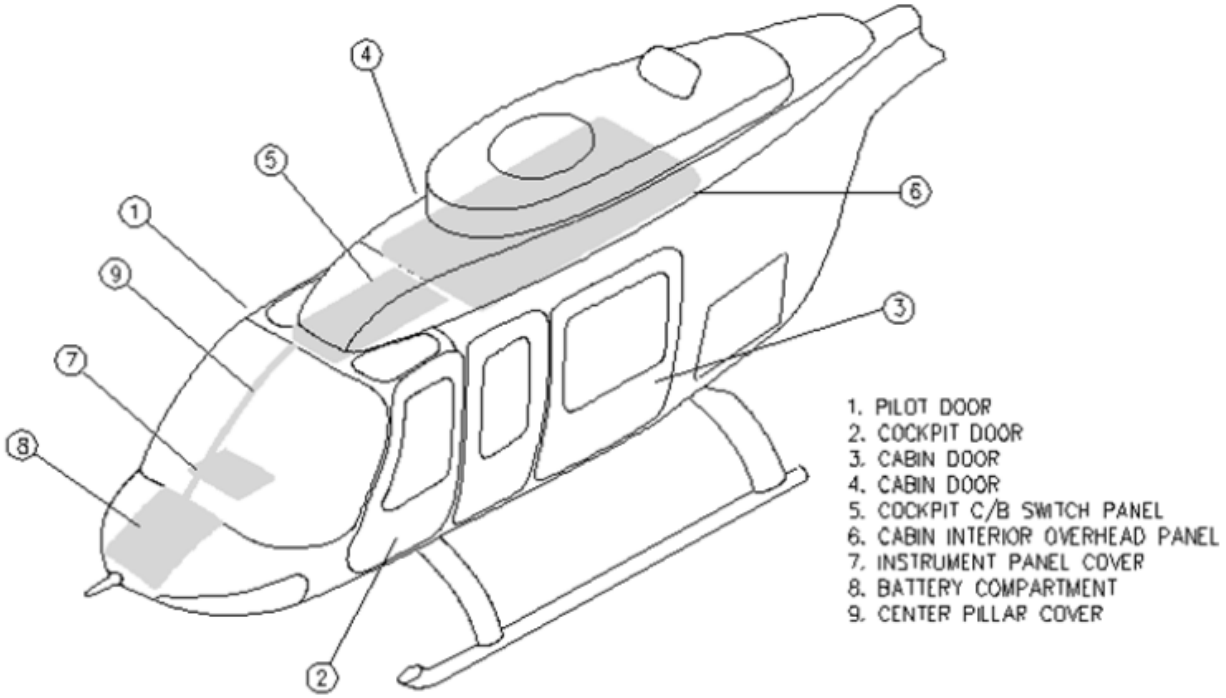

SECTION: C 1710 – ICA OF INSTALLED EQUIPMENT
TYPE: 12 MONTH NVG INSPECTION
NOTE:

MAINTENANCE ACTION	REFERENCE	MECHANIC'S INITIALS
2.4 Clean lights using a clean, lint-free cloth and isopropyl alcohol (if necessary).		
2.5 Placards	Chp 4	
2.5.1 Placards that control the operation of equipment during NVG operations should be inspected for condition and legibility. Placards that are illegible and/or damaged must be replaced.		
2.6 Instrument Panel Flood Lights.	Para 5-6 Fig 5.1 & 5.2	
2.6.1 Inspect floodlights for cleanliness, cracks and cracking around mount holes. Flood lights with cracks must be replaced.		
2.6.2 Inspect instrument panel cover around mount areas for signs of loose hardware and cracking. Tighten hardware as necessary. Cracks may be repaired per OEM specification IAW manufacturer instructions.		
2.6.3 Inspect rheostat and wiring for chafing, fraying and condition of electrical connectors. Chafing on wire casing up to fifty percent (50%) of the original thickness is acceptable. Wires with more than fifty percent (50%) chafing on wire casing must be replaced. Bare or frayed wires are unacceptable and must be repaired or replaced.		
2.7 Radio, Indicator, Annunciator and Lamp Assembly Filtration	Para 6 Fig 5.3	
2.7.1 Inspect filters for cleanliness, crazing, condensation and cracking. Any filters with crazing, condensation, or cracking that allows incompatible light leakage or degraded visual acuity of display must be replaced. If condensation can be cleaned after removing the filter, and the condensation is not a defect in the filter itself, the filter may be reinstalled.	See Appex C for equipment that requires filtration	
2.8 Overhead Panel Flood Lighting	Para 5-8 Fig 5.4 & 5.5	
2.8.1 Inspect LED light for cleanliness, scratches and cracking around mount holes. Flood lights with cracks must be replaced.		
2.8.2 Inspect center post around mount area for signs of loose hardware and cracking. Tighten hardware as necessary. Cracks may be repaired per OEM specification IAW manufacturer instructions.		
2.9 Backup Utility Light.	Para 5-9 Fig 5.6	
2.9.1 Inspect utility light for cleanliness, cracks in lens, and cracking around mount holes. Cracked lenses must be replaced. Utility lights with cracks must be replaced.		
2.9.2 Inspect aircraft fuselage around mount area for signs of loose hardware and cracking. Tighten hardware as necessary. Cracks in fuselage may be repaired per OEM specification IAW manufacturer instructions.		

SECTION: C 1710 – ICA OF INSTALLED EQUIPMENT
TYPE: 12 MONTH NVG INSPECTION
NOTE:

MAINTENANCE ACTION	REFERENCE	MECHANIC'S INITIALS
2.9.3 Inspect wiring for chafing, fraying and condition of electrical connectors. Chafing on wire casing up to fifty percent (50%) of the original thickness is acceptable. Wires with more than fifty percent (50%) chafing on wire casing must be replaced. Bare or frayed wires are unacceptable and must be repaired or replaced.		
2.10 Cabin Overhead Lighting	Appex B & C	
2.10.1 Inspect overhead light(s) for cleanliness, scratches and cracking around mount holes. Light(s) with cracks must be replaced.		
2.10.2 Inspect light wiring for chafing and fraying. Chafing on wire casing up fifty percent (50%) of the original thickness is acceptable. Wires with more than fifty percent (50%) chafing on wire casing must be replaced. Bare or frayed wires are unacceptable and must be repaired or replaced.		
2.10.3 Inspect interior panels around mount area for cracking. Cracks up to one-half inch (0.5 in.) are acceptable. Panels with cracks longer than one-half inch (0.5 in.) must be repaired per OEM specification IAW manufacturer instructions.		
2.10.4 As applicable per Appendix C: Inspect filters for cleanliness, crazing, condensation and cracking. Any filters with crazing, condensation, or cracking that allows incompatible light leakage or degraded visual acuity of display must be replaced. If condensation can be cleaned after removing the filter, and the condensation is not a defect in the filter itself, the filter may be reinstalled. See Appendix C for equipment that requires filtration.	Appex C	
2.11 External Lighting.	Appex B	
2.11.1 Inspect the lens, replace if the lens has excessive scratching or discoloration. If the lens is cracked in any amount replace the lens and or light assembly.		
NOTE: The LED external lights are designed with multiple LED's. If any LED fails, the unit must be replaced.		
C 1710.3 POST INSPECTION		
3.1 Post Inspection – Accomplish the following;		
3.1.1 Perform operational check of inspected systems to verify correct function and operation.		
3.1.2 Inspection of all panels, radio and enunciator lights for proper illumination and balance. Inspect rheostat controls for full range and illumination levels.		
3.1.3 Replace or close all applicable trim panels, covers, access and inspection doors/covers as necessary.		

SECTION: **C 1710 – ICA OF INSTALLED EQUIPMENT**
TYPE: **12 MONTH NVG INSPECTION**
NOTE:

Upon satisfactory completion of each inspection item, the mechanic shall initial the pertinent space as provided. All mechanics shall sign and initial, in the space provided, at the end of the form.

At the completion of each inspection form, an A&P mechanic shall check the entire form for completion and then enter his/her signature, certificate type and number, and date in the space provided at the end of the form. The same individual is also responsible for making the logbook entry shown at the conclusion of this inspection.

I certify that I have inspected and/or completed all the items initialed by me in accordance with Maritime Helicopters' Bell 206L *Series* Approved Aircraft Inspection Program and found them to be in an airworthy condition except as may be noted in the Aircraft Logbook.

INITIALS	SIGNATURE	CERTIFICATE TYPE & NUMBER

I have reviewed this inspection form to verify that all items have been completed and have made an entry in the Aircraft Log Book.

I certify that this aircraft has been inspected in accordance with Maritime Helicopters' Bell 206L *Series* AAIP – C 1710 – 12 Month NVG Inspection and was determined to be in an airworthy condition.

Registration No.: N_____ End Aircraft Ending Total Time: _____
Aircraft S/N: _____ Date: _____ Aircraft Ending Total Cycles: _____

Signature: _____ Certificate Type & No: _____